Control valve - 3-way with flanges (3-way mixing valve / 3-way diverting valve)
DN 15 - 150

ARI-STEVI® 450 / 451
Electric actuator ARI-PREMIO

- Enclosure IP 65
- 2 torque switches
- Handwheel
- Additional devices available, e.g. potentiometer

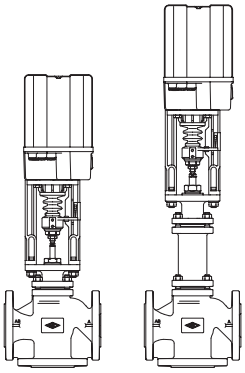

Page 2

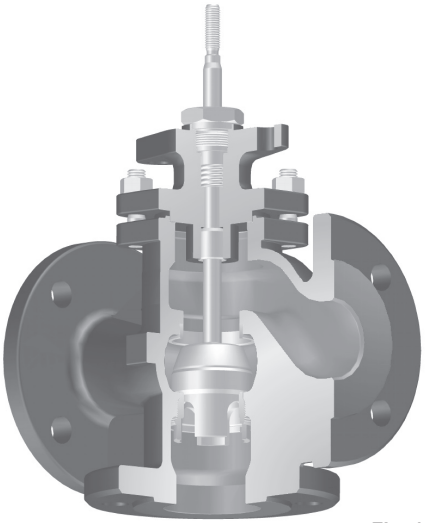

Fig. 450

ARI-STEVI® 450 / 451
Electric actuator AUMA SAR

- Electric multiturn actuator capable of high closing pressures
- Enclosure IP 67
- 2 torque switches
- 2 travel switches
- Handwheel
- Overheating protection for motor as standard
- Additional devices available, e.g. potentiometer
- Explosion proof version available

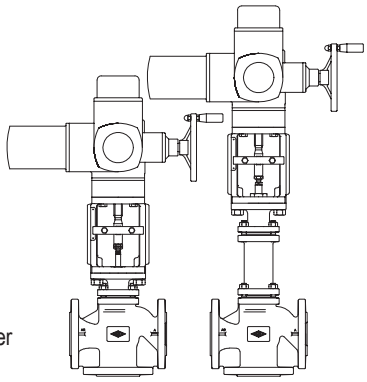

Page 6

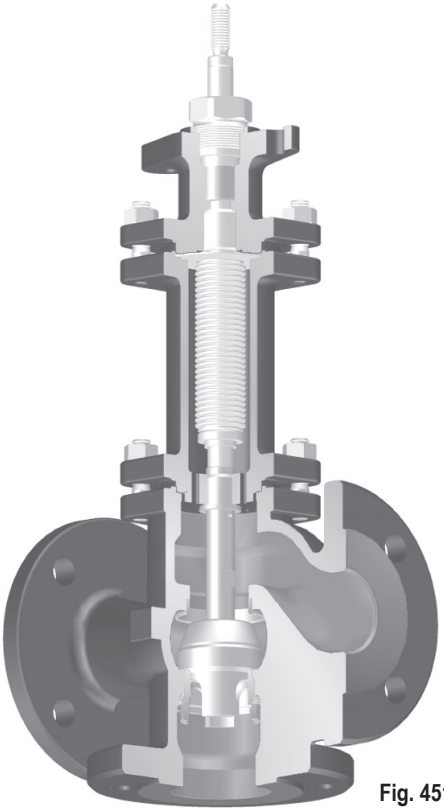

Fig. 451

ARI-STEVI® 450 / 451
Pneumatic actuator ARI-DP

- Reversible pneumatic actuator
- Actuator with rolling diaphragm
- Air supply pressure max. 6 bar
- Stem protection by bellow
- Maintenance-free O-ring sealing
- Assembly of additional devices acc. to DIN IEC 60534-6

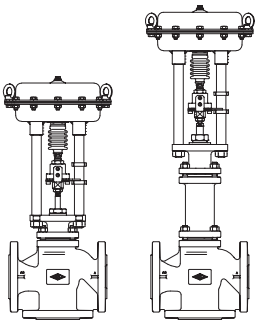

Page 14

Features:

- Compact design
- Precision guided stem
- Burnished stem
- Tapered seat ring
- Seat options available
- Reducible kvs-values
- Rangeability 30 : 1
- Guided plug
- Spring loaded PTFE-V ring packing unit
- Two-ply bellows seal as standard
- Travel indicator

Control valve in 3-way-form with electric actuator ARI-PREMIO (3-way mixing valve / 3-way diverting valve)

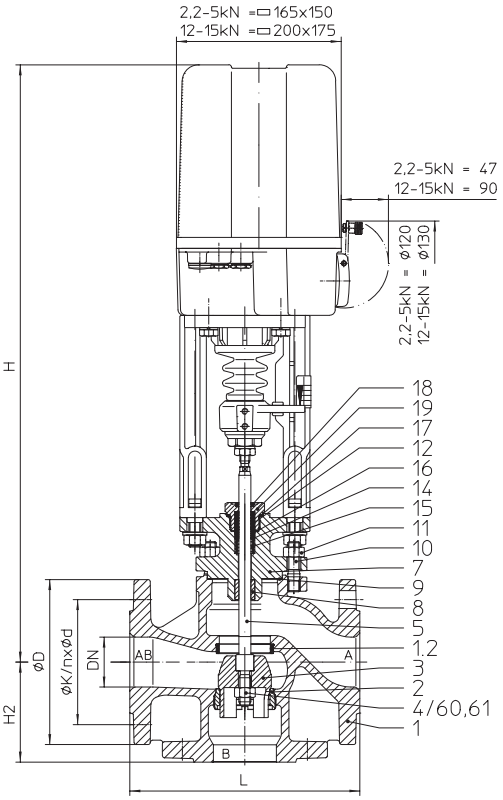

Fig. 450

Figure	Nominal pressure	Material	Nominal diameter
12.450 / 12.451	PN16	EN-JL1040	DN15-100
22.450 / 22.451	PN16	EN-JS1049	DN15-150
23.450 / 23.451	PN25	EN-JS1049	DN15-150
34.450 / 34.451	PN25	1.0619+N	DN15-150
35.450 / 35.451	PN40	1.0619+N	DN15-150
55.450 / 55.451	PN40	1.4408	DN15-150 (55.451 to DN100)

Other materials and versions on request.

Construction

- 3-way mixing valve (DN15-150)
- 3-way diverting valve (DN40-150)

(Operating mode refer to page 24)

Stem sealing

Fig. 450:
- PTFE-V-ring unit -10°C up to +220°C
- PTFE-packing -10°C up to +250°C
- Pure graphite-packing -10°C up to +450°C

Fig. 451:
- Stainless steel bellows seal with safety stuffing box -60°C up to +450°C

Plug design
standard:

- Parabolic plug, metal seat / V-port plug, metal seat

Guiding

- Stem and port guiding

Flow characteristic

- linear

Rangeability

- 30 : 1

Shut off class (seat / plug leakage classes)

- Metal seat - Leakage class IV acc. to DIN EN 1349 or IEC 60534-4

Closing pressures refer to page 4.

Technical data for actuator refer to data sheet.

Selection of possible applications

Industrial installations, processing technology, plant manufacturing, etc.
(other applications on request)

Selection of possible flow media

Fig. 450: Cooling water, cooling brine, warm water, hot water, steam, gas, etc.

Fig. 451: Refrigerant, cooling water, warm water, hot water, thermal oil, steam, gas, etc.

(other flow media on request)

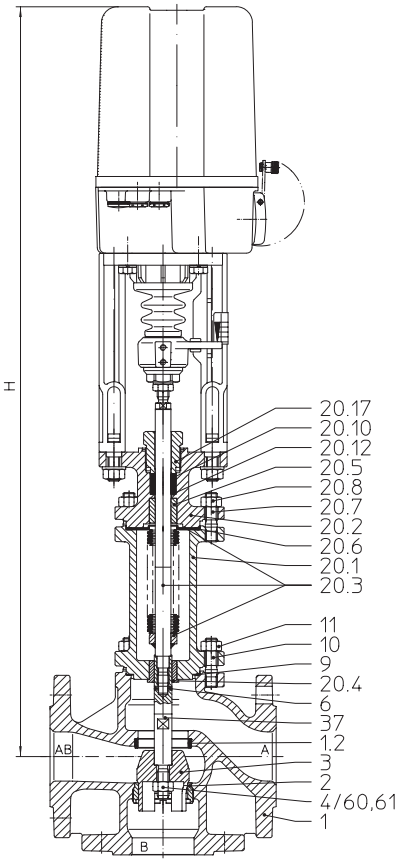

Fig. 451

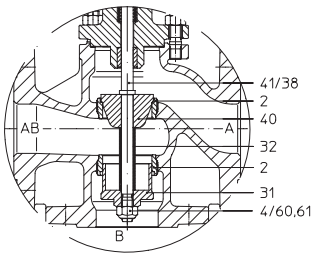

Diverting plug DN40 upwards

(Further information refer to page 24)

Dimensions and weights

DN				15	20	25	32	40	50	65	80	100	125	150
L			(mm)	130	150	160	180	200	230	290	310	350	400	480
H2			(mm)	65	70	75	80	90	100	120	130	150	200	210
Fig. 450	H		(mm)	564	564	568	594	600	598	634	650	669	738	800
	ARI-PREMIO 2,2 kN	PN16	(kg)	10,5	11,5	12,5	15,1	18,4	22,2	28,9	35,4	52	73	--
		PN25/40	(kg)	11	12,1	13,1	16	19,6	23,7	31	38	56	100	--
	ARI-PREMIO 5 kN	PN16	(kg)	11,6	12,6	13,6	16,2	19,5	23,3	30	36,5	53	74	101
		PN25/40	(kg)	12,1	13,2	14,2	17,1	20,7	24,8	32,1	39,1	57	101	144
	H		(mm)	--	--	718	744	750	748	784	800	819	886	948
	ARI-PREMIO 12 kN	PN16	(kg)	--	--	17,6	20,2	23,5	27,3	34	40,5	57	78	105
	ARI-PREMIO 15 kN	PN25/40	(kg)	--	--	18,2	21,1	24,7	28,8	36,1	43,1	61	105	148
Fig. 451	H		(mm)	749	749	753	779	769	763	869	882	898	1093	1126
	ARI-PREMIO 2,2 kN	PN16	(kg)	13,5	14,5	15,7	18,1	22,9	26,1	35,2	45,1	63	--	--
		PN25/40	(kg)	14,2	15,3	16,6	19,2	24,5	28	37,9	48,7	68	--	--
	ARI-PREMIO 5 kN	PN16	(kg)	14,6	15,6	16,8	19,2	24	27,2	36,3	46,2	64	84	111
		PN25/40	(kg)	15,3	16,4	17,7	20,3	25,6	29,1	39	49,8	69	112	155
	H		(mm)	--	--	903	929	919	913	1019	1032	1048	1241	1274
	ARI-PREMIO 12 kN	PN16	(kg)	--	--	20,8	23,2	28	31,2	40,3	50,2	68	88	115
	ARI-PREMIO 15 kN	PN25/40	(kg)	--	--	21,7	24,3	29,6	33,1	43	53,8	73	116	159

Standard-flange dimensions refer to page 23.

Face-to-face dimension FTF series 1 according to DIN EN 558

Parts

Pos.	Description	Fig. 12.450 Fig. 12.451	Fig. 22.450 / Fig. 23.450 Fig. 22.451 / Fig. 23.451	Fig. 34.450 / Fig. 35.450 Fig. 34.451 / Fig. 35.451	Fig. 55.450 Fig. 55.451
1	Body	EN-GJL-250 , EN-JL1040	EN-GJS-400-18U-LT, EN-JS1049	GP240GH+N, 1.0619+N	GX5CrNiMo19-11-2, 1.4408
1.2	Seat ring	X20Cr13+QT, 1.4021+QT			--
2	Seat ring *	X20Cr13+QT, 1.4021+QT			X6CrNiMoTi17-12-2, 1.4571
3	Plug *	X20Cr13+QT, 1.4021+QT			X6CrNiMoTi17-12-2, 1.4571
4	Hexagon nut *	8-A2B		--	
5	Stem *	X20Cr13+QT, 1.4021+QT			X6CrNiMoTi17-12-2, 1.4571
6	Straight pin *	X10CrNi18-8, 1.4310			A2
7	Mounting bonnet	EN-GJS-400-18U-LT, EN-JS1049		GP240GH+N, 1.0619+N	GX5CrNiMo19-11-2, 1.4408
8	Guide bushing	X20Cr13+QT, 1.4021+QT (hardened)			X6CrNiMoTi17-12-2, 1.4571
9	Gasket *	Pure graphite (CrNi laminated with graphite)			
10	Studs	25CrMo4, 1.7218			A4 - 70
11	Hexagon nuts	C35E, 1.1181			A4
12	V-ring unit *	PTFE			
14	Washer *	X5CrNi18-10, 1.4301			
15	Spring *	X10CrNi18-8, 1.4310			
16	Bushing *	PTFE (reinforced)			
17	Sealing ring *	Cu / Soft iron			X6CrNiMoTi17-12-2, 1.4571
18	Scraper *	PTFE (reinforced)			
19	Screw joint *	X8CrNiS18-9, 1.4305			
20.1	Bellows housing	EN-GJS-400-18U-LT, EN-JS1049		GP240GH+N, 1.0619+N	GX5CrNiMo19-11-2, 1.4408
20.2	Mounting bonnet	EN-GJS-400-18U-LT, EN-JS1049		GP240GH+N, 1.0619+N	GX5CrNiMo19-11-2, 1.4408
20.3	Stem- / Bellows unit *	X20Cr13+QT, 1.4021+QT / X6CrNiTi18-10, 1.4541			X6CrNiMoTi17-12-2, 1.4571
20.4	Guide bushing	X20Cr13+QT, 1.4021+QT (hardened)			X6CrNiMoTi17-12-2, 1.4571
20.5	Guide bushing	X20Cr13+QT, 1.4021+QT (hardened)			X6CrNiMoTi17-12-2, 1.4571
20.6	Gasket *	Pure graphite (CrNi laminated with graphite)			
20.7	Studs	25CrMo4, 1.7218			A4 - 70
20.8	Hexagon nuts	C35E, 1.1181			A4
20.10	Packing ring *	Pure graphite			
20.12	Washer *	X5CrNi18-10, 1.4301			
20.17	Screw joint *	X8CrNiS18-9, 1.4305			
31	Plug *	X20Cr13+QT, 1.4021+QT			X6CrNiMoTi17-12-2, 1.4571
32	Distance bush *	X5CrNi18-10, 1.4301			
37	Stem adapter *	X20Cr13+QT, 1.4021+QT			X6CrNiMoTi17-12-2, 1.4571
38	Stem adapter *	X20Cr13+QT, 1.4021+QT			X6CrNiMoTi17-12-2, 1.4571
40	Plug *	X20Cr13+QT, 1.4021+QT			X6CrNiMoTi17-12-2, 1.4571
41	Stem *	X20Cr13+QT, 1.4021+QT			X6CrNiMoTi17-12-2, 1.4571
60	Hexagon nut *	--		A4	
61	Locking washer set	--		A4	

* Spare parts

Information / restriction of technical rules need to be observed!

ARI-Valves of EN-JL1040 are not allowed to be operated in systems acc. to TRD 110.

A production allowance acc. to TRB 801 No. 45 exists (acc. to TRB 801 No. 45 EN-JL1040 is not allowed.)

The engineer, designing a system or a plant, is responsible for the selection of the correct valve.

max. permissible closing pressures for both seat positions on flow-to-open P2 = 0
Observe restrictions by Pressure-temperature-ratings, refer to page 23.
Observe standard values for selection of plugs, refer to „Selection ARI-STEVI“ in the Technical annex.

Mixing function	DN		15	20	25	32	40	50	65	80	100	125	150
AB ⇦ A, B	Seat-Ø A/B (mm)		21/20	21/25	27/27	31/32	41/40	51/50	66/60	81/75	101/95	120/120	140/140
	Standard Kvs-values		4	6,3	10	16	25	40	63	100	160	250	320
	Reduced Kvs-values [3]		2,5	4	6,3	10	16	25	40	63	100	160	250
	Travel (mm)		20						30			50	
Actuator [1] ARI-PREMIO 2,2 kN	Closing pressure (bar)	I.	40	35,9	30,8	21,7	12,8	8	4,3	2,7	1,5		
		II.	40	33,7	28,8	20,2	11,9	7,4	3,9	2,3	1,3		
		III.	30,7	30,1	27,1	19,1	10,6	6,5	3,6	2,2	1,2		
	Operating time [2] (s) (Op. speed 0,38 mm/s)		53						79				
Actuator [1] ARI-PREMIO 5 kN	Closing pressure (bar)	I.		40	40	40	33,2	21,3	12,3	8	4,9	3,4	2,4
		II.		40	40	40	32,3	20,7	11,9	7,6	4,7	3,2	2,3
		III.	40	40	40	40	31	19,8	11,6	7,5	4,6	3	2,1
	Operating time [2] (s) (Op. speed 0,38 mm/s)		53						79			132	
Actuator [1] ARI-PREMIO 12 kN	Closing pressure (bar)	I.					40	40	32,3	21,2	13,5	9,5	6,9
		II.					40	40	31,8	20,9	13,3	9,3	6,8
		III.					40	40	31,6	20,7	13,2	9,1	6,6
	Operating time [2] (s) (Op. speed 0,38 mm/s)						53		79			132	
Actuator [1] ARI-PREMIO 15 kN	Closing pressure (bar)	I.							40	26,9	17,2	12,1	8,8
		II.							40	26,6	17	11,9	8,7
		III.							40	26,4	16,9	11,7	8,5
	Operating time [2] (s) (Op. speed 0,38 mm/s)								79			132	

I. Fig. 450: PTFE-V-ring unit; II. Fig. 450: PTFE- / Pure graphite-packing; III. Fig. 451: Bellows seal

Diverting function	DN		15	20	25	32	40	50	65	80	100	125	150
AB ⇨ A, B	Seat-Ø A/B (mm)		21/20	21/25	27/27	31/32	40/40	50/50	60/60	75/75	90/90	105/105	125/125
	Standard Kvs-values		4	6,3	10	16	14	25	45	60	95	170	200
	Reduced Kvs-values [3]		2,5	4	6,3	10	--	--	--	--	--	--	--
	Travel (mm)		20						30				
Actuator [1] ARI-PREMIO 2,2 kN	Closing pressure (bar)	I.	25,7	18	15,4	10,8	13,4	8,2	5,4	3,2	2	1,3	
		II.	24,1	16,8	14,4	10,1	12,5	7,6	4,8	2,8	1,8	1,1	
		III.	15,4	15	13,6	9,5	11,1	6,8	4,5	2,6	1,6		
	Operating time [2] (s) (Op. speed 0,38 mm/s)		53						79				
Actuator [1] ARI-PREMIO 5 kN	Closing pressure (bar)	I.	40	40	38,5	27,4	34,6	21,9	15	9,4	6,4	4,5	3,1
		II.	40	40	37,5	26,7	33,7	21,3	14,4	9	6,1	4,3	2,9
		III.	40	40	36,6	26,1	32,3	20,4	14,1	8,8	6	4	2,7
	Operating time [2] (s) (Op. speed 0,38 mm/s)		53						79				
Actuator [1] ARI-PREMIO 12 kN	Closing pressure (bar)	I.			40	40	40	40	38,9	24,8	17,1	12,3	8,6
		II.			40	40	40	40	38,4	24,4	16,9	12,1	8,5
		III.			40	40	40	40	38	24,2	16,7	11,9	8,3
	Operating time [2] (s) (Op. speed 0,38 mm/s)				53				79				
Actuator [1] ARI-PREMIO 15 kN	Closing pressure (bar)	I.							40	31,4	21,7	15,7	11
		II.							40	31,1	21,5	15,5	10,9
		III.							40	30,8	21,3	15,3	10,7
	Operating time [2] (s) (Op. speed 0,38 mm/s)								79				

I. Fig. 450: PTFE-V-ring unit; II. Fig. 450: PTFE- / Pure graphite-packing; III. Fig. 451: Bellows seal

[1] Motor voltage: 230V 50Hz
Other voltages: 24V 50/60Hz; 115V 50/60Hz; 230V 60Hz
Technical data for actuator refer to data sheet ARI-PREMIO.

[2] Indicated operating times with 50Hz.

[3] Kvs-value reducible on request (2 screwed seat rings required) (refer to page 24).

Control valve in 3-way-form with electric actuator AUMA (3-way mixing valve / 3-way diverting valve)

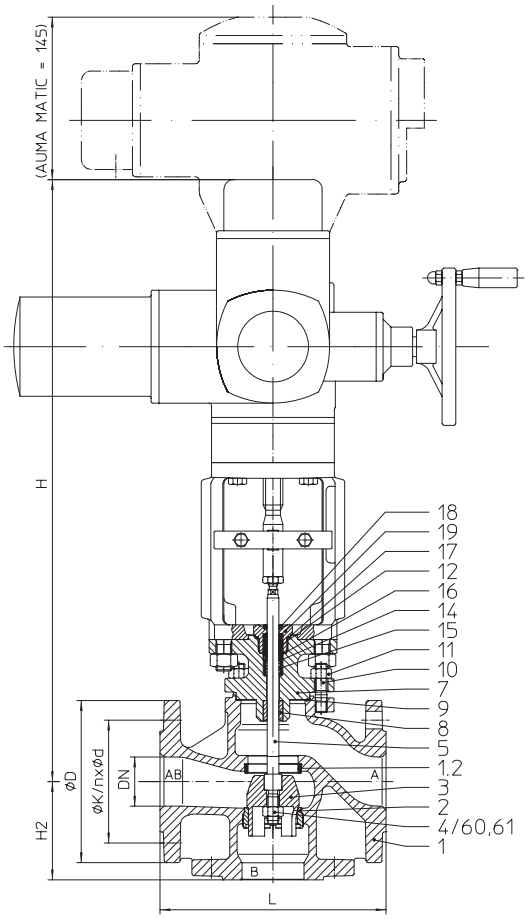

Fig. 450

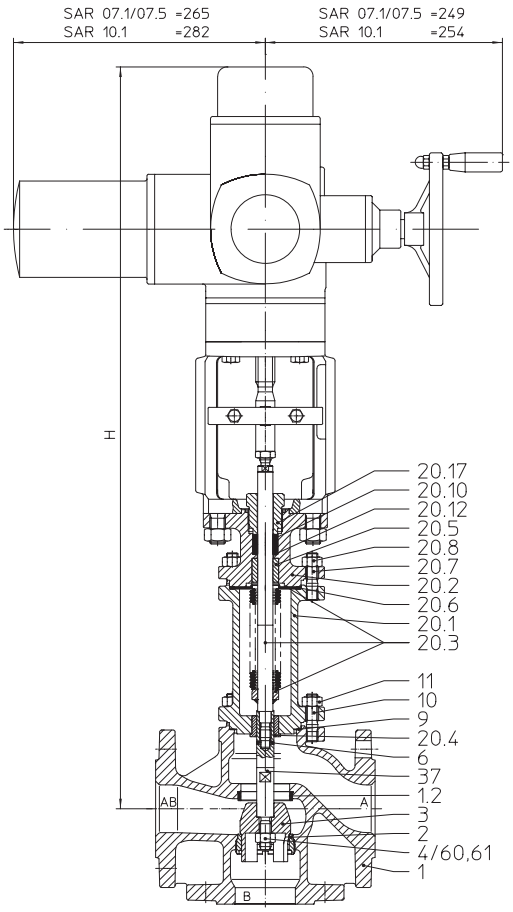

Fig. 451

Figure	Nominal pressure	Material	Nominal diameter
12.450 / 12.451	PN16	EN-JL1040	DN40-100
22.450 / 22.451	PN16	EN-JS1049	DN40-150
23.450 / 23.451	PN25	EN-JS1049	DN40-150
34.450 / 34.451	PN25	1.0619+N	DN40-150
35.450 / 35.451	PN40	1.0619+N	DN40-150
55.450 / 55.451	PN40	1.4408	DN40-150 (55.451 to DN100)

Other materials and versions on request.

Construction

- 3-way mixing valve (DN15-150)
- 3-way diverting valve (DN40-150)

(Operating mode refer to page 24)

Stem sealing

Fig. 450:
- PTFE-V-ring unit -10°C up to +220°C
- PTFE-packing -10°C up to +250°C
- Pure graphite-packing -10°C up to +450°C

Fig. 451:
- Stainless steel bellows seal with safety stuffing box -60°C up to +450°C

Plug design
standard:

- Parabolic plug, metal seat / V-port plug, metal seat

Guiding

- Stem and port guiding

Flow characteristic

- linear

Rangeability

- 30 : 1

Shut off class (seat / plug leakage classes)

- Metal seat - Leakage class IV acc. to DIN EN 1349 or IEC 60534-4

Closing pressures refer to page 8.

Technical data for actuator refer to data sheet.

Selection of possible applications

Industrial installations, processing technology, plant manufacturing, etc.
(other applications on request)

Selection of possible flow media

Fig. 450: Cooling water, cooling brine, warm water, hot water, steam, gas, etc.

Fig. 451: Refrigerant, cooling water, warm water, hot water, thermal oil, steam, gas, etc.

(other flow media on request)

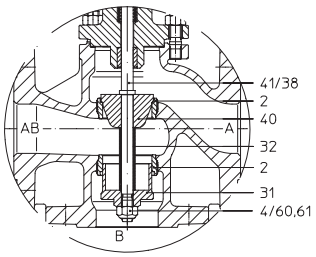

Diverting plug DN40 upwards

(Further information refer to page 24)

Dimensions and weights

DN				40	50	65	80	100	125	150
L			(mm)	200	230	290	310	350	400	480
H2			(mm)	90	100	120	130	150	200	210
Fig. 450	H		(mm)	640	638	674	690	709	756	818
	AUMA SAR 07.1 AUMA SAR 07.5	PN16	(kg)	39,3	44,6	51,3	57,8	74	95	123
		PN25/40	(kg)	40,5	46,1	53,4	60,4	78	123	165
	H		(mm)	--	--	686	702	721	768	830
	AUMA SAR 10.1	PN16	(kg)	--	--	55,8	62,3	79	100	127
		PN25/40	(kg)	--	--	57,9	64,9	83	127	170
Fig. 451	H		(mm)	809	803	909	922	938	1111	1144
	AUMA SAR 07.1 AUMA SAR 07.5	PN16	(kg)	43,8	48,5	57,6	67,5	85	105	133
		PN25/40	(kg)	45,4	50,4	60,3	71,1	90	133	176
	H		(mm)	--	--	--	--	--	1123	1156
	AUMA SAR 10.1	PN16	(kg)	--	--	--	--	--	110	137
		PN25/40	(kg)	--	--	--	--	--	138	180

Standard-flange dimensions refer to page 23. **(For version with AUMA SAR Ex other heights.)**

Face-to-face dimension FTF series 1 according to DIN EN 558

Parts

Pos.	Description	Fig. 12.450 Fig. 12.451	Fig. 22.450 / Fig. 23.450 Fig. 22.451 / Fig. 23.451	Fig. 34.450 / Fig. 35.450 Fig. 34.451 / Fig. 35.451	Fig. 55.450 Fig. 55.451
1	Body	EN-GJL-250 , EN-JL1040	EN-GJS-400-18U-LT, EN-JS1049	GP240GH+N, 1.0619+N	GX5CrNiMo19-11-2, 1.4408
1.2	Seat ring	X20Cr13+QT, 1.4021+QT			--
2	Seat ring *	X20Cr13+QT, 1.4021+QT			X6CrNiMoTi17-12-2, 1.4571
3	Plug *	X20Cr13+QT, 1.4021+QT			X6CrNiMoTi17-12-2, 1.4571
4	Hexagon nut *	8-A2B		--	
5	Stem *	X20Cr13+QT, 1.4021+QT			X6CrNiMoTi17-12-2, 1.4571
6	Straight pin *	X10CrNi18-8, 1.4310			A2
7	Mounting bonnet	EN-GJS-400-18U-LT, EN-JS1049		GP240GH+N, 1.0619+N	GX5CrNiMo19-11-2, 1.4408
8	Guide bushing	X20Cr13+QT, 1.4021+QT (hardened)			X6CrNiMoTi17-12-2, 1.4571
9	Gasket *	Pure graphite (CrNi laminated with graphite)			
10	Studs	25CrMo4, 1.7218			A4 - 70
11	Hexagon nuts	C35E, 1.1181			A4
12	V-ring unit *	PTFE			
14	Washer *	X5CrNi18-10, 1.4301			
15	Spring *	X10CrNi18-8, 1.4310			
16	Bushing *	PTFE (reinforced)			
17	Sealing ring *	Cu / Soft iron			X6CrNiMoTi17-12-2, 1.4571
18	Scraper *	PTFE (reinforced)			
19	Screw joint *	X8CrNiS18-9, 1.4305			
20.1	Bellows housing	EN-GJS-400-18U-LT, EN-JS1049		GP240GH+N, 1.0619+N	GX5CrNiMo19-11-2, 1.4408
20.2	Mounting bonnet	EN-GJS-400-18U-LT, EN-JS1049		GP240GH+N, 1.0619+N	GX5CrNiMo19-11-2, 1.4408
20.3	Stem- / Bellows unit *	X20Cr13+QT, 1.4021+QT / X6CrNiTi18-10, 1.4541			X6CrNiMoTi17-12-2, 1.4571
20.4	Guide bushing	X20Cr13+QT, 1.4021+QT (hardened)			X6CrNiMoTi17-12-2, 1.4571
20.5	Guide bushing	X20Cr13+QT, 1.4021+QT (hardened)			X6CrNiMoTi17-12-2, 1.4571
20.6	Gasket *	Pure graphite (CrNi laminated with graphite)			
20.7	Studs	25CrMo4, 1.7218			A4 - 70
20.8	Hexagon nuts	C35E, 1.1181			A4
20.10	Packing ring *	Pure graphite			
20.12	Washer *	X5CrNi18-10, 1.4301			
20.17	Screw joint *	X8CrNiS18-9, 1.4305			
31	Plug *	X20Cr13+QT, 1.4021+QT			X6CrNiMoTi17-12-2, 1.4571
32	Distance bush *	X5CrNi18-10, 1.4301			
37	Stem adapter *	X20Cr13+QT, 1.4021+QT			X6CrNiMoTi17-12-2, 1.4571
38	Stem adapter *	X20Cr13+QT, 1.4021+QT			X6CrNiMoTi17-12-2, 1.4571
40	Plug *	X20Cr13+QT, 1.4021+QT			X6CrNiMoTi17-12-2, 1.4571
41	Stem *	X20Cr13+QT, 1.4021+QT			X6CrNiMoTi17-12-2, 1.4571
60	Hexagon nut *	--		A4	
61	Locking washer set	--		A4	

* Spare parts

Information / restriction of technical rules need to be observed!

ARI-Valves of EN-JL1040 are not allowed to be operated in systems acc. to TRD 110.

A production allowance acc. to TRB 801 No. 45 exists (acc. to TRB 801 No. 45 EN-JL1040 is not allowed.)

The engineer, designing a system or a plant, is responsible for the selection of the correct valve.

max. permissible closing pressures for both seat positions on flow-to-open P2 = 0
Observe restrictions by Pressure-temperature-ratings, refer to page 23.
Observe standard values for selection of plugs, refer to „Selection ARI-STEVI“ in the Technical annex.

Fig. 450

Mixing function AB A B	**DN**			**40**	**50**	**65**	**80**	**100**	**125**	**150**
	Seat-Ø A/B (mm)			41/40	51/50	66/60	81/75	101/95	120/120	140/140
	Standard Kvs-values			25	40	63	100	160	250	320
	Reduced Kvs-values [4]			16	25	40	63	100	160	250
	Travel (mm)			20		30			50	
Actuator [1] **AUMA SAR 07.1** Output drive Form A TR 20 x 4	Closing pressure (bar)	**I./II.**	shut off	40	40	40	29,7	19	13,4	9,7
			controlling [3]	40	36,5	21,4	14	8,8	6,1	4,4
	Torque (Nm)			15	20	30	30	30	30	30
	Operating time [2] (s)			54		56			94	
	Output drive (rpm)			5,6		8			8	
Actuator [1] **AUMA SAR 07.5** Output drive Form A TR 26 x 5	Closing pressure (bar)	**I./II.**	shut off		40	40	40	26,9	18,9	13,8
			controlling [3]		40	30,5	20	12,8	8,9	6,5
	Torque (Nm)				30	40	60	60	60	60
	Operating time [2] (s)				43	64			55	
	Output drive (rpm)				5,6	5,6			11	
Actuator [1] **AUMA SAR 10.1** Output drive Form A TR 26 x 5	Closing pressure (bar)	**I./II.**	shut off			40	40	31,6	32,3	23,7
			controlling [3]			40	40	26,9	18,9	13,8
	Torque (Nm)					60	60	70	100	100
	Operating time [2] (s)					64			55	
	Output drive (rpm)					5,6			11	

I. Fig. 450: PTFE-V-ring unit; **II. Fig. 450: PTFE- / Pure graphite-packing**

Diverting function AB A B	**DN**			**40**	**50**	**65**	**80**	**100**	**125**	**150**
	Seat-Ø (mm)			40/40	50/50	60/60	75/75	90/90	105/105	125/125
	Standard Kvs-values			14	25	45	60	95	170	200
	Reduced Kvs-values [4]			--	--	--	--	--	--	--
	Travel (mm)			20		30				
Actuator [1] **AUMA SAR 07.1** Output drive Form A TR 20 x 4	Closing pressure (bar)	**I./II.**	shut off	40	40	40	34,7	24	17,4	12,2
			controlling [3]	40	37,6	25,8	16,4	11,2	8	5,6
	Torque (Nm)			15	20	30	30	30	30	30
	Operating time [2] (s)			54		56				
	Output drive (rpm)			5,6		8				
Actuator [1] **AUMA SAR 07.5** Output drive Form A TR 26 x 5	Closing pressure (bar)	**I./II.**	shut off		40	40	40	33,9	24,6	17,3
			controlling [3]		40	36,8	23,4	16,2	11,6	8,1
	Torque (Nm)				30	35	50	60	60	60
	Operating time [2] (s)				43	64				
	Output drive (rpm)				5,6	5,6				
Actuator [1] **AUMA SAR 10.1** Output drive Form A TR 26 x 5	Closing pressure (bar)	**I./II.**	shut off			40	40	39,8	40	29,5
			controlling [3]			40	40	33,9	24,6	17,3
	Torque (Nm)					60	70	70	100	100
	Operating time [2] (s)					64				
	Output drive (rpm)					5,6				

I. Fig. 450: PTFE-V-ring unit; **II. Fig. 450: PTFE- / Pure graphite-packing**

[1] Motor voltage: 400V 50Hz 3~
(Other voltages on request)
Technical data for actuator refer to price list.

[2] Indicated operating times with 50Hz.

[3] Restrictions through max. permissible torque of the actuator at controlling operation.

[4] Kvs-value reducible on request (2 screwed seat rings required) (refer to page 24).

max. permissible closing pressures for both seat positions on flow-to-open P2 = 0
Observe restrictions by Pressure-temperature-ratings, refer to page 23.
Observe standard values for selection of plugs, refer to „Selection ARI-STEVI“ in the Technical annex.

Fig. 451

Mixing function	**DN**			**40**	**50**	**65**	**80**	**100**	**125**	**150**
AB ⇐ A, B	Seat-Ø A/B (mm)			41/40	51/50	66/60	81/75	101/95	120/120	140/140
	Standard Kvs-values			25	40	63	100	160	250	320
	Reduced Kvs-values [4]			16	25	40	63	100	160	250
	Travel (mm)			20		30			50	
Actuator [1] **AUMA SAR 07.1** Output drive Form A TR 20 x 4	Closing pressure (bar)	**III.**	shut off	40	40	40	29,5	18,9	13,2	9,6
			controlling [3]	40	35,7	21,1	13,8	8,7	5,9	4,3
	Torque (Nm)			15	20	30	30	30	30	30
	Operating time [2] (s)			54		56			94	
	Output drive (rpm)			5,6		8			8	
Actuator [1] **AUMA SAR 07.5** Output drive Form A TR 26 x 5	Closing pressure (bar)	**III.**	shut off		40	40	30,8	19,7	18,8	13,7
			controlling [3]		40	30,2	19,8	12,6	8,7	6,3
	Torque (Nm)				30	40	45	45	60	60
	Operating time [2] (s)				43	64			55	
	Output drive (rpm)				5,6	5,6			11	
Actuator [1] **AUMA SAR 10.1** Output drive Form A TR 26 x 5	Closing pressure (bar)	**III.**	shut off						28,8	21,1
			controlling [3]						18,8	13,7
	Torque (Nm)								90	90
	Operating time [2] (s)								55	
	Output drive (rpm)								11	

III. Fig. 451: Bellows seal

Diverting function	**DN**			**40**	**50**	**65**	**80**	**100**	**125**	**150**
AB ⇒ A, B	Seat-Ø (mm)			40/40	50/50	60/60	75/75	90/90	105/105	125/125
	Standard Kvs-values			14	25	45	60	95	170	200
	Reduced Kvs-values [4]			--	--	--	--	--	--	--
	Travel (mm)			20		30				
Actuator [1] **AUMA SAR 07.1** Output drive Form A TR 20 x 4	Closing pressure (bar)	**III.**	shut off	40	40	40	34,5	23,9	17,1	12
			controlling [3]	40	36,7	25,5	13,1	11,1	7,8	5,4
	Torque (Nm)			15	20	30	30	30	30	30
	Operating time [2] (s)			54		56				
	Output drive (rpm)			5,6		8				
Actuator [1] **AUMA SAR 07.5** Output drive Form A TR 26 x 5	Closing pressure (bar)	**III.**	shut off		40	40	35,9	24,9	24,3	17,1
			controlling [3]		40	36,4	23,2	16	11,4	7,9
	Torque (Nm)				30	35	45	45	60	60
	Operating time [2] (s)				43	64				
	Output drive (rpm)				5,6	5,6				
Actuator [1] **AUMA SAR 10.1** Output drive Form A TR 26 x 5	Closing pressure (bar)	**III.**	shut off						37,3	26,3
			controlling [3]						24,3	17,1
	Torque (Nm)								90	90
	Operating time [2] (s)								65	
	Output drive (rpm)								5,6	

III. Fig. 451: Bellows seal

[1] Motor voltage: 400V 50Hz 3~
(Other voltages on request)
Technical data for actuator refer to price list.

[2] Indicated operating times with 50Hz.

[3] Restrictions through max. permissible torque of the actuator at controlling operation.

[4] Kvs-value reducible on request (2 screwed seat rings required) (refer to page 24).

Control valve in 3-way-form with electric actuator AUMA - strengthened design (3-way mixing valve / 3-way diverting valve)

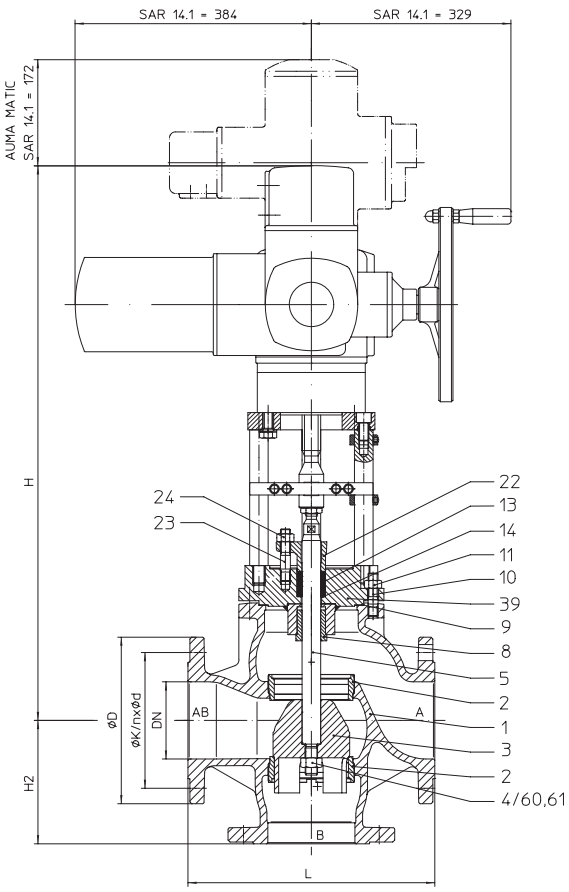

Fig. 450

Figure	Nominal pressure	Material	Nominal diameter
22.450	PN16	EN-JS1049	DN125v-150v
23.450	PN25	EN-JS1049	DN125v-150v
34.450	PN25	1.0619+N	DN125v-150v
35.450	PN40	1.0619+N	DN125v-150v
55.450	PN40	1.4408	DN125v-150v
Other materials and versions on request.			

Construction
- 3-way mixing valve (DN15-150)
- 3-way diverting valve (DN40-150)

(Operating mode refer to page 24)

Stem sealing

Fig. 450:
- PTFE-packing -10°C up to +250°C
- Pure graphite-packing -10°C up to +450°C

Plug design
standard:
- Parabolic plug, metal seat / V-port plug, metal seat

Guiding
- Stem and port guiding

Flow characteristic
- linear

Rangeability
- 30 : 1

Shut off class (seat / plug leakage classes)
- Metal seat - Leakage class IV acc. to DIN EN 1349 or IEC 60534-4

Closing pressures refer to page 12.

Technical data for actuator refer to data sheet.

Selection of possible applications

Industrial installations, processing technology, plant manufacturing, etc.
(other applications on request)

Selection of possible flow media

Fig. 450: Cooling water, cooling brine, warm water, hot water, steam, gas, etc.

(other flow media on request)

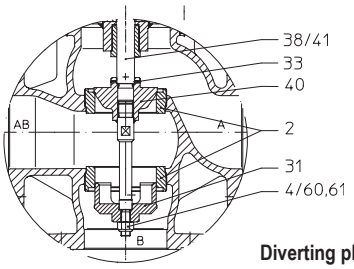

Diverting plug DN40 upwards
(Further information refer to page 24)

Dimensions and weights

DN				125v	150v
L			(mm)	400	480
H2			(mm)	200	210
Fig. 450	H		(mm)	899	932
	AUMA SAR 14.1	PN16	(kg)	134	161
		PN25/40	(kg)	161	204

Standard-flange dimensions refer to page 23. **(For version with AUMA SAR Ex other heights.)**

Face-to-face dimension FTF series 1 according to DIN EN 558

Parts

Pos.	Description	Fig. 22.450 / Fig. 23.450 Fig. 22.451 / Fig. 23.451	Fig. 34.450 / Fig. 35.450 Fig. 34.451 / Fig. 35.451	Fig. 55.450
1	Body	EN-GJS-400-18U-LT, EN-JS1049	GP240GH+N, 1.0619+N	GX5CrNiMo19-11-2, 1.4408
2	Seat ring *	X20Cr13+QT, 1.4021+QT		X6CrNiMoTi17-12-2, 1.4571
3	Plug *	X20Cr13+QT, 1.4021+QT		X6CrNiMoTi17-12-2, 1.4571
4	Hexagon nut *	8-A2B	--	
5	Stem *	X20Cr13+QT, 1.4021+QT		X6CrNiMoTi17-12-2, 1.4571
8	Guide bushing	X20Cr13+QT, 1.4021+QT (hardened)		X6CrNiMoTi17-12-2, 1.4571
9	Gasket *	Pure graphite (CrNi laminated with graphite)		
10	Studs	25CrMo4, 1.7218		A4 - 70
11	Hexagon nuts	C35E, 1.1181		A4
13	Packing ring	PTFE or Pure graphite		
14	Washer *	X5CrNi18-10, 1.4301		
22	Packing box flange	EN-GJS-400-18U-LT, EN-JS1049		--
23	Studs	25CrMo4, 1.7218		--
24	Hexagon nuts	C35E, 1.1181		--
31	Plug *	X20Cr13+QT, 1.4021+QT		X6CrNiMoTi17-12-2, 1.4571
38	Stem adapter *	X20Cr13+QT, 1.4021+QT		--
39	Stuffing box housing	P265 GH, 1.0425 / P250 GH, 1.0460		--
40	Plug *	X20Cr13+QT, 1.4021+QT		X6CrNiMoTi17-12-2, 1.4571
41	Stem *	X20Cr13+QT, 1.4021+QT		X6CrNiMoTi17-12-2, 1.4571
60	Hexagon nut *	--	A4	
61	Locking washer set	--	A4	

* Spare parts

Information / restriction of technical rules need to be observed!

ARI-Valves of EN-JL1040 are not allowed to be operated in systems acc. to TRD 110.

A production allowance acc. to TRB 801 No. 45 exists (acc. to TRB 801 No. 45 EN-JL1040 is not allowed.)

The engineer, designing a system or a plant, is responsible for the selection of the correct valve.

max. permissible closing pressures for both seat positions on flow-to-open P2 = 0
Observe restrictions by Pressure-temperature-ratings, refer to page 23.
Observe standard values for selection of plugs, refer to „Selection ARI-STEVI“ in the Technical annex.

Fig. 450

Mixing function AB A B	**DN**			**125v**	**150v**
	Seat-Ø A/B (mm)			120/120	140/140
	Standard Kvs-values			250	320
	Reduced Kvs-values 4)			160	250
	Travel (mm)			50	
Actuator 1) **AUMA SAR 14.1** Output drive Form A TR 30 x 6 - LH	Closing pressure (bar)	**II.**	shut off	40	33,9
			controlling 3)	31,3	22,9
	Torque (Nm)			175	175
	Operating time 2) (s)			63	
	Output drive (rpm)			8	
II. Fig. 450: PTFE- / Pure graphite-packing					

Diverting function AB A B	**DN**			**125v**	**150v**
	Seat-Ø (mm)			105/105	125/125
	Standard Kvs-values			170	200
	Reduced Kvs-values 4)			--	--
	Travel (mm)			30	
Actuator 1) **AUMA SAR 14.1** Output drive Form A TR 30 x 6 - LH	Closing pressure (bar)	**II.**	shut off	40	40
			controlling 3)	40	28,6
	Torque (Nm)			120	175
	Operating time 2) (s)			38	
	Output drive (rpm)			8	
II. Fig. 450: PTFE- / Pure graphite-packing					

Fig. 451 with AUMA SAR 14.1 on request.

1) Motor voltage: 400V 50Hz 3~
(Other voltages on request)
Technical data for actuator refer to price list.

2) Indicated operating times with 50Hz.

3) Restrictions through max. permissible torque of the actuator at controlling operation.

4) Further Kvs-values reducible on request.

Control valve in 3-way-form with pneumatic actuator DP (3-way mixing valve / 3-way diverting valve)

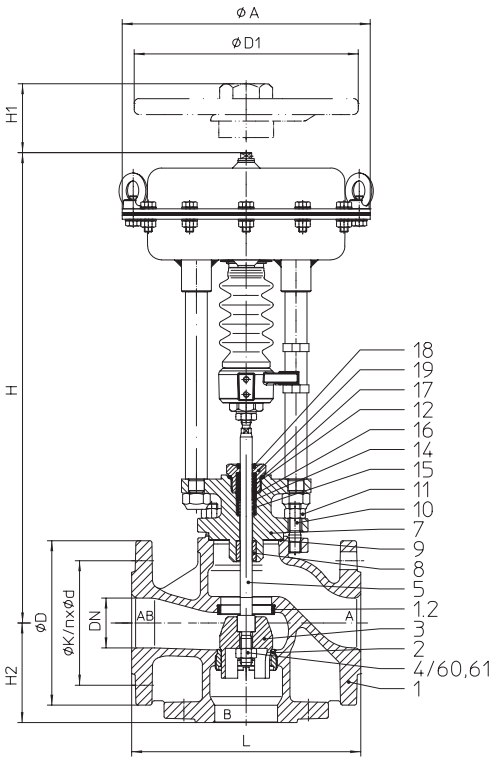

Fig. 450

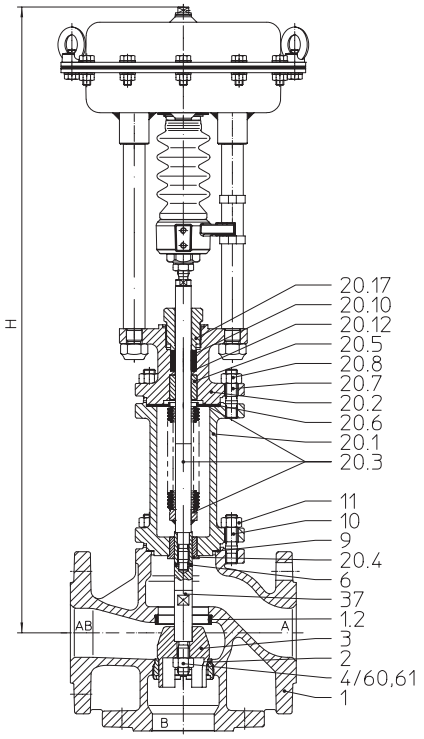

Fig. 451

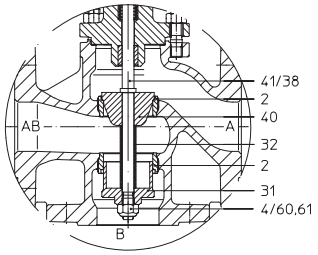

Diverting plug DN40 upwards

(Further information refer to page 24)

Figure	Nominal pressure	Material	Nominal diameter
12.450 / 12.451	PN16	EN-JL1040	DN15-100
22.450 / 22.451	PN16	EN-JS1049	DN15-150
23.450 / 23.451	PN25	EN-JS1049	DN15-150
34.450 / 34.451	PN25	1.0619+N	DN15-150
35.450 / 35.451	PN40	1.0619+N	DN15-150
55.450 / 55.451	PN40	1.4408	DN15-150 (55.451 to DN100)
Other materials and versions on request.			

Construction

- 3-way mixing valve (DN15-150)
- 3-way diverting valve (DN40-150)

(Operating mode refer to page 24)

Stem sealing

Fig. 450:
- PTFE-V-ring unit -10°C up to +220°C
- PTFE-packing -10°C up to +250°C
- Pure graphite-packing -10°C up to +450°C

Fig. 451:
- Stainless steel bellows seal with safety stuffing box -60°C up to +450°C

Plug design

standard:
- Parabolic plug, metal seat / V-port plug, metal seat

Guiding
- Stem and port guiding

Flow characteristic
- linear

Rangeability
- 30 : 1

Shut off class (seat / plug leakage classes)
- Metal seat - Leakage class IV acc. to DIN EN 1349 or IEC 60534-4

Closing pressures refer to page 16.

Technical data for actuator refer to data sheet.

Selection of possible applications

Industrial installations, processing technology, plant manufacturing, etc.
(other applications on request)

Selection of possible flow media

Fig. 450: Cooling water, cooling brine, warm water, hot water, steam, gas, etc.

Fig. 451: Refrigerant, cooling water, warm water, hot water, thermal oil, steam, gas, etc.

(other flow media on request)

Failure position dependent on valve duty.

Retracted stem on air failure:

- with a mixing valve port A -> AB is closed
- with a diverting valve port B -> AB is closed

Extended stem on air failure:

- with a mixing valve port B -> AB is closed
- with a diverting valve port A -> AB is closed

Top mounted handwheel

Actuator		DP32	DP33	DP34
Ø D1	(mm)	225	300	400
H1	(mm)	270	284	442
Weight	(kg)	5	8	17
Technical data for actuator refer to data sheet DP32-34Tri.				

Dimensions and weights

DN				15	20	25	32	40	50	65	80	100	125	150
L			(mm)	130	150	160	180	200	230	290	310	350	400	480
H2			(mm)	65	70	75	80	90	100	120	130	150	200	210
DP 32 ØA = 250 mm	H		(mm)	450	450	454	480	486	484	520	536	555	602	--
	Fig. 450	PN16	(kg)	14,1	15,1	16,1	18,7	22	25,8	32,5	39	56	76	--
		PN25/40	(kg)	14,6	15,7	16,7	19,6	23,2	27,3	34,6	41,6	60	104	--
	H		(mm)	635	635	639	665	655	649	755	768	784	--	--
	Fig. 451	PN16	(kg)	17,1	18,1	19,3	21,7	26,5	29,7	38,8	48,7	66	--	--
		PN25/40	(kg)	17,8	18,9	20,2	22,8	28,1	31,6	41,5	52,3	72	--	--
DP 33 ØA = 300 mm	H		(mm)	505	505	509	535	541	539	575	591	610	657	719
	Fig. 450	PN16	(kg)	20,1	21,1	22,1	24,7	28	31,8	38,5	45	62	82	110
		PN25/40	(kg)	20,6	21,7	22,7	25,6	29,2	33,3	40,6	47,6	66	110	153
	H		(mm)	690	690	694	720	710	704	810	823	839	1012	1045
	Fig. 451	PN16	(kg)	23,1	24,1	25,3	27,7	32,5	35,7	44,8	54,7	72	92	120
		PN25/40	(kg)	23,8	24,9	26,2	28,8	34,1	37,6	47,5	58,3	78	120	163
DP 34 ØA = 405 mm	H		(mm)	--	--	--	--	--	--	710	726	745	772	834
	Fig. 450	PN16	(kg)	--	--	--	--	--	--	68,5	75	92	112	140
		PN25/40	(kg)	--	--	--	--	--	--	70,6	77,6	96	140	183
	H		(mm)	--	--	--	--	--	--	945	958	974	1127	1160
	Fig. 451	PN16	(kg)	--	--	--	--	--	--	74,8	84,7	102	122	150
		PN25/40	(kg)	--	--	--	--	--	--	77,5	88,3	108	150	193
Standard-flange dimensions refer to page 23.														

Face-to-face dimension FTF series 1 according to DIN EN 558

Parts

Pos.	Description	Fig. 12.450 Fig. 12.451	Fig. 22.450 / Fig. 23.450 Fig. 22.451 / Fig. 23.451	Fig. 34.450 / Fig. 35.450 Fig. 34.451 / Fig. 35.451	Fig. 55.450 Fig. 55.451
1	Body	EN-GJL-250 , EN-JL1040	EN-GJS-400-18U-LT, EN-JS1049	GP240GH+N, 1.0619+N	GX5CrNiMo19-11-2, 1.4408
1.2	Seat ring	X20Cr13+QT, 1.4021+QT			--
2	Seat ring *	X20Cr13+QT, 1.4021+QT			X6CrNiMoTi17-12-2, 1.4571
3	Plug *	X20Cr13+QT, 1.4021+QT			X6CrNiMoTi17-12-2, 1.4571
4	Hexagon nut *	8-A2B		--	
5	Stem *	X20Cr13+QT, 1.4021+QT			X6CrNiMoTi17-12-2, 1.4571
6	Straight pin *	X10CrNi18-8, 1.4310			A2
7	Mounting bonnet	EN-GJS-400-18U-LT, EN-JS1049		GP240GH+N, 1.0619+N	GX5CrNiMo19-11-2, 1.4408
8	Guide bushing	X20Cr13+QT, 1.4021+QT (hardened)			X6CrNiMoTi17-12-2, 1.4571
9	Gasket *	Pure graphite (CrNi laminated with graphite)			
10	Studs	25CrMo4, 1.7218			A4 - 70
11	Hexagon nuts	C35E, 1.1181			A4
12	V-ring unit *	PTFE			
14	Washer *	X5CrNi18-10, 1.4301			
15	Spring *	X10CrNi18-8, 1.4310			
16	Bushing *	PTFE (reinforced)			
17	Sealing ring *	Cu / Soft iron			X6CrNiMoTi17-12-2, 1.4571
18	Scraper *	PTFE (reinforced)			
19	Screw joint *	X8CrNiS18-9, 1.4305			
20.1	Bellows housing	EN-GJS-400-18U-LT, EN-JS1049		GP240GH+N, 1.0619+N	GX5CrNiMo19-11-2, 1.4408
20.2	Mounting bonnet	EN-GJS-400-18U-LT, EN-JS1049		GP240GH+N, 1.0619+N	GX5CrNiMo19-11-2, 1.4408
20.3	Stem- / Bellows unit *	X20Cr13+QT, 1.4021+QT / X6CrNiTi18-10, 1.4541			X6CrNiMoTi17-12-2, 1.4571
20.4	Guide bushing	X20Cr13+QT, 1.4021+QT (hardened)			X6CrNiMoTi17-12-2, 1.4571
20.5	Guide bushing	X20Cr13+QT, 1.4021+QT (hardened)			X6CrNiMoTi17-12-2, 1.4571
20.6	Gasket *	Pure graphite (CrNi laminated with graphite)			
20.7	Studs	25CrMo4, 1.7218			A4 - 70
20.8	Hexagon nuts	C35E, 1.1181			A4
20.10	Packing ring *	Pure graphite			
20.12	Washer *	X5CrNi18-10, 1.4301			
20.17	Screw joint *	X8CrNiS18-9, 1.4305			
31	Plug *	X20Cr13+QT, 1.4021+QT			X6CrNiMoTi17-12-2, 1.4571
32	Distance bush *	X5CrNi18-10, 1.4301			
37	Stem adapter *	X20Cr13+QT, 1.4021+QT			X6CrNiMoTi17-12-2, 1.4571
38	Stem adapter *	X20Cr13+QT, 1.4021+QT			X6CrNiMoTi17-12-2, 1.4571
40	Plug *	X20Cr13+QT, 1.4021+QT			X6CrNiMoTi17-12-2, 1.4571
41	Stem *	X20Cr13+QT, 1.4021+QT			X6CrNiMoTi17-12-2, 1.4571
60	Hexagon nut *	--		A4	
61	Locking washer set	--		A4	
* Spare parts					

Information / restriction of technical rules need to be observed!

ARI-Valves of EN-JL1040 are not allowed to be operated in systems acc. to TRD 110.

A production allowance acc. to TRB 801 No. 45 exists (acc. to TRB 801 No. 45 EN-JL1040 is not allowed.)

The engineer, designing a system or a plant, is responsible for the selection of the correct valve.

max. permissible closing pressures for both seat positions on flow-to-open P2 = 0
Observe restrictions by Pressure-temperature-ratings, refer to page 23.
Observe standard values for selection of plugs, refer to „Selection ARI-STEVI“ in the Technical annex.

Spring closes port A -> AB or Spring closes port B -> AB

Mixing function (AB ⇐ A, B)																
					DN	**15**	**20**	**25**	**32**	**40**	**50**	**65**	**80**	**100**	125	150
					Seat-Ø A/B (mm)	21/20	21/25	27/27	31/32	41/40	51/50	66/60	81/75	101/95	120/120	140/140
					Standard Kvs-values	4	6,3	10	16	25	40	63	100	160	250	320
					Reduced Kvs-values [3]	2,5	4	6,3	10	16	25	40	63	100	160	250
					Travel (mm)	20						30			50	
Actuator **DP32**	Spring range (bar)	0,2-1,0	Air supply pressure min. (bar)	1,2	I.	5,5	3,3	2,6	1,4							
					II.	2,3	1									
					III.											
		0,4-1,2		1,6	I.	18,6	12,6	10,7	7,2	3,9	2,2					
					II.	15,4	10,3	8,7	5,8	3	1,6					
					III.	8,6	8	7,1	4,6	1,7						
		0,8-2,4		3,2	I.	40	31,4	26,8	18,8	11	6,8	3,7	2,2	1,2		
					II.	40	29,1	24,8	17,4	10,2	6,3	3,2	1,9	1		
					III.	26,4	25,7	23,2	16,2	8,9	5,4	2,9	1,7			
		1,5-2,5		4,0	I.		40	40	39,1	23,5	15					
					II.		40	40	37,7	22,7	14,4					
					III.	40	40	40	36,5	21,4	13,6					
		2,0-3,3		5,3	I.				40	32,5	20,8					
					II.				40	31,6	20,2					
					III.				40	30,3	19,4					
Actuator **DP33**	Spring range (bar)	0,2-1,0	Air supply pressure min. (bar)	1,2	I.	13,3 c)[4]	8,8 c)[4]	7,4 c)[4]	4,9 c)[4]	2,4 c)[4]	1,2 c)[4]					
					II.	10,1 c)[4]	6,5 c)[4]	5,4 c)[4]	3,4 c)4)	1,6 c)4)						
					III.	5 a)[4]	4,3 a)[4]	3,8 a)[4]	2,2 a)[4]							
		0,4-1,2		1,6	I.	34,2 c)[4]	23,7 c)[4]	20,2 c)[4]	14,1 c)[4]	8,1 c)[4]	4,9 c)[4]	2,5 [4]	1,4 [4]			
					II.	31 c)[4]	21,4 c)[4]	18,3 c)[4]	12,7 c)[4]	7,3 c)[4]	4,4 c)[4]	2,1 [4]	1,1 [4]			
					III.	19,1 a)[4]	18,5 a)[4]	16,6 a)[4]	11,5 a)[4]	5,9 a)[4]	3,5 a)[4]	1,8 a)[4]				
		0,8-2,4		3,2	I.	40 a)[4]	40 a)[4]	40 a)[4]	32,5 a)[4]	19,5 a)[4]	12,3 a)[4]	7 [4]	4,4 [4]	2,6 [4]		
					II.	40 a)[4]	40 a)[4]	40 a)[4]	31,1 a)[4]	18,6 a)[4]	11,8 a)[4]	6,5 [4]	4,1 [4]	2,4 [4]		
					III.	40 [4]	40 [4]	40 [4]	29,9 [4]	17,3 [4]	10,9 [4]	6,2 [4]	3,9 [4]	2,3 [4]		
		1,5-3,0		4,5	I.							14,8	9,6	6		
					II.							14,3	9,3	5,8		
					III.							14	9,1	5,7		
		1,7-2,7		4,4	I.				40 a)	40 a)	29 a)					
					II.				40 a)	40 a)	28,4 a)					
					III.				40	40	27,6					
		2,0-4,0 (2,3-3,7)		6,0 (6,0)	I.						(40)	20,3	13,3	8,4		
					II.						(39,5)	19,9	12,9	8,2		
					III.						(38,7)	19,6	12,8	8,1		
Actuator **DP34**	Spring range (bar)	0,2-1,0	Air supply pressure min. (bar)	1,2	I.							2,5 b)	1,5 b)			
					II.							2,1 b)	1,2 b)			
					III.							1,8 e)	1 e)			
		0,4-1,2		1,6	I.							7 b)	4,4 b)	2,7 b)	1,8	1,2
					II.							6,6 b)	4,1 b)	2,5 b)	1,6	1,1
					III.							6,3 d)	3,9 d)	2,3 d)	1,4 a)	
		0,8-2,4		3,2	I.							16	10,4	6,5	4,5	3,2
					II.							15,5	10,1	6,3	4,3	3,1
					III.							15,2 b)	9,9 b)	6,2 b)	4,1	3
		1,5-3,0 (2,1-3,0)		4,5 (5,1)	I.							(40)	(29,7)	(19)	9,3	6,7
					II.							(40)	(29,4)	(18,8)	9,1	6,6
					III.										8,9	6,5
		2,0-4,0 (2,4-3,6)		6,0 (6,0)	I.								(34,2)	(21,9)	12,7	9,2
					II.								(33,9)	(21,7)	12,5	9,1
					III.										12,3	9

I. Fig. 450: PTFE-V-ring unit; **II. Fig. 450: PTFE- / Pure graphite-packing;** **III. Fig. 451: Bellows seal**

Air supply pressure max. of pneumatic actuators DP:	max. permissible	6 bar
Air supply pressure max. limit of control valve:	max. permissible	a) 5 bar b) 4,5 bar c) 4 bar d) 3,5 bar e) 3 bar

[3] Kvs-value reducible on request (2 screwed seat rings required) (refer to page 24).

[4] At mixing function an spring closes direction A->AB, the max. permissible air supply pressure is 3,5 bar.

max. permissible closing pressures for both seat positions on flow-to-open P2 = 0
Observe restrictions by Pressure-temperature-ratings, refer to page 23.
Observe standard values for selection of plugs, refer to „Selection ARI-STEVI“ in the Technical annex.

Spring closes port A -> AB or Spring closes port B -> AB

Diverting function	DN				15	20	25	32	40	50	65	80	100	125	150
AB → A, B	Seat-Ø A/B (mm)				21/20	21/25	27/27	31/32	40/40	50/50	60/60	75/75	90/90	105/105	125/125
	Standard Kvs-values				4	6,3	10	16	14	25	45	60	95	170	200
	Reduced Kvs-values [3]				2,5	4	6,3	10	--	--	--	--	--	--	--
	Travel (mm)				20						30				
Actuator DP32	Spring range (bar)	Air supply pressure min. (bar)													
	0,2-1,0	1,2	I.		2,7	1,6	1,3								
			II.		1,1										
			III.												
	0,4-1,2	1,6	I.		9,3	6,3	5,3	3,6	4,1	2,3	1,2				
			II.		7,7	5,2	4,3	2,9	3,2	1,7					
			III.		4,3	4	3,5	2,3	1,9						
	0,8-2,4	3,2	I.		22,5	15,7	13,4	9,4	11,6	7,1	4,5	2,7	1,7	1,1	
			II.		20,8	14,5	12,4	8,7	10,6	6,5	4	2,3	1,4		
			III.		13,2	12,9	11,6	8,1	9,3	5,6	3,7	2,1	1,3		
	1,5-2,5	4,0	I.		40	32,1	27,5	19,6	24,5	15,4					
			II.		40	30,9	26,5	18,8	23,6	14,8					
			III.		28,7	28,4	25,7	18,3	22,3	14					
	2,0-3,3	5,3	I.			40	37,6	26,8	33,8	21,4					
			II.			40	36,6	26,1	32,9	20,8					
			III.		39,8	39,5	35,8	25,5	31,6	19,9					
Actuator DP33	Spring range (bar)	Air supply pressure min. (bar)													
	0,2-1,0	1,2	I.		6,6 c)[5]	4,4 c)[5]	3,7 c)[5]	2,4 c)[5]	2,6 c)[5]	1,3 c)[5]					
			II.		5 c)[5]	3,3 c)[5]	2,7 c)[5]	1,7 c)[5]	1,7 c)[5]						
			III.		2,5 a)[5]	2,2 a)5)	1,9 a)5)	1,1 a)5)							
	0,4-1,2	1,6	I.		17,1 c)[5]	11,9 c)5)	10,1 c)5)	7 c)5)	8,5 c)5)	5,1 c)5)	3,2 5)	1,8 5)	1,1 5)		
			II.		15,5 c)[5]	10,7 c)5)	9,1 c)5)	6,3 c)5)	7,6 c)5)	4,5 c)5)	2,6 5)	1,4 5)			
			III.		9,6 a)[5]	9,2 a)5)	8,3 a)5)	5,7 a)5)	6,3 a)5)	3,6 a)5)	2,3 a)5)	1,2 a)5)			
	0,8-2,4	3,2	I.		38 a)[5]	26,8 a)5)	23 a)5)	16,3 a)5)	20,3 a)5)	12,7 a)5)	8,5 5)	5,2 5)	3,5 5)	2,4 5)	1,6 5)
			II.		36,4 a)[5]	25,6 a)5)	22 a)5)	15,6 a)5)	19,4 a)5)	12,1 a)5)	8 5)	4,9 5)	3,2 5)	2,2 5)	1,4 5)
			III.		23,7 [5]	23,4 5)	21,2 5)	15 5)	18,1 5)	11,3 5)	7,6 5)	4,7 5)	3,1 5)	1,9 5)	1,2 5)
	1,5-3,0	4,5	I.								17,9	11,2	7,7	5,4	3,7
			II.								17,3	10,9	7,4	5,2	3,6
			III.								17	10,7	7,3	5	3,4
	1,7-2,7	4,4	I.		40 a)	40 a)	40 a)	37 a)	40 a)	29,8 a)					
			II.		40 a)	40 a)	40 a)	36,3 a)	40 a)	29,3 a)					
			III.		40	40	40	35,7	40	28,4					
	2,0-4,0 (2,3-3,7)	6,0 (6,0)	I.					(40)		(40)	24,5	15,5	10,7	7,6	5,3
			II.					(40)		(40)	24	15,2	10,4	7,4	5,1
			III.					(40)		(39,8)	23,6	15	10,3	7,2	5
Actuator DP34	Spring range (bar)	Air supply pressure min. (bar)													
	0,2-1,0	1,2	I.								3,2 b)	1,8 b)	1,1 b)		
			II.								2,7 b)	1,5 b)			
			III.								2,3 e)	1,2 e)			
	0,4-1,2	1,6	I.								8,6 b)	5,3 b)	3,5 b)	2,4	1,6
			II.								8 b)	4,9 b)	3,2 b)	2,2	1,4
			III.								7,7 d)	4,7 d)	3,1 d)	2 a)	1,3 a)
	0,8-2,4	3,2	I.								19,3	12,2	8,3	5,9	4,1
			II.								18,8	11,8	8,1	5,7	3,9
			III.								18,4 b)	11,6 b)	7,9 b)	5,5	3,8
	2,1-3,0	5,1	I.								40	34,7	24	17,4	12,2
			II.								40	34,3	23,8	17,2	12
			III.											16,9	11,9
	2,4-3,6	6,0	I.									39,9	27,6	20	14,1
			II.									39,5	27,4	19,8	13,9
			III.											19,6	13,8

I. Fig. 450: PTFE-V-ring unit; **II. Fig. 450: PTFE- / Pure graphite-packing;** **III. Fig. 451: Bellows seal**

Air supply pressure max. of pneumatic actuators DP: max. permissible 6 bar
Air supply pressure max. limit of control valve: max. permissible a) 5 bar b) 4,5 bar c) 4 bar d) 3,5 bar e) 3 bar

[3] Kvs-value reducible on request (2 screwed seat rings required) (refer to page 24).

[5] At diverting function an spring closes direction B->AB, the max. permissible air supply pressure is 3,5 bar.

Control valve in 3-way-form with pneumatic actuator DP - strengthened design (3-way mixing valve / 3-way diverting valve)

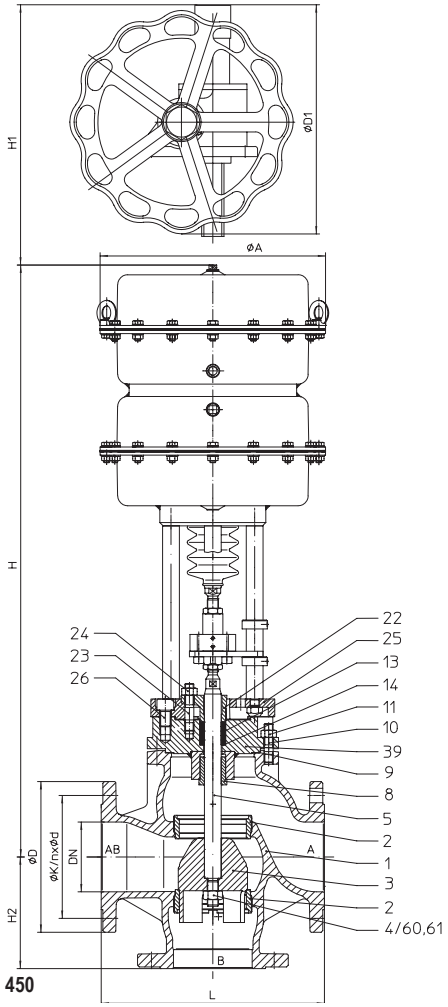

Fig. 450

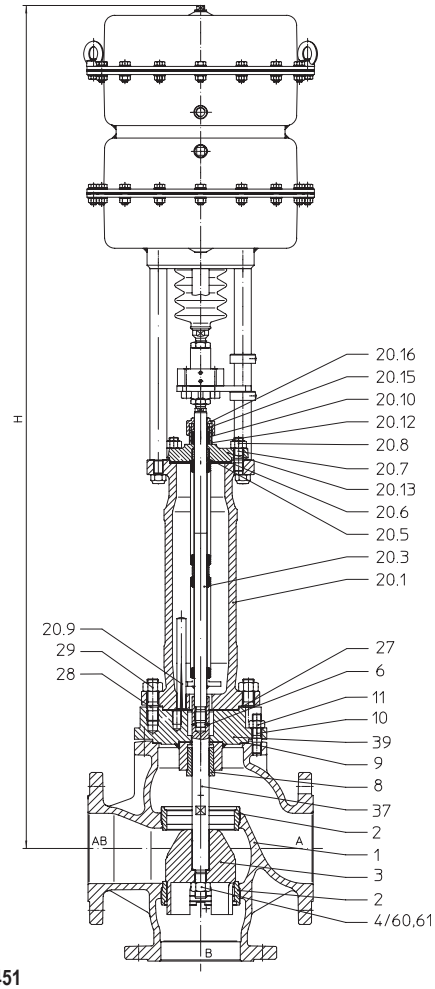

Fig. 451

Figure	Nominal pressure	Material	Nominal diameter
22.450 / 22.451	PN16	EN-JS1049	DN125v-150v
23.450 / 23.451	PN25	EN-JS1049	DN125v-150v
34.450 / 34.451	PN25	1.0619+N	DN125v-150v
35.450 / 35.451	PN40	1.0619+N	DN125v-150v
55.450	PN40	1.4408	DN125v-150v
Other materials and versions on request.			

Construction
- 3-way mixing valve (DN15-150)
- 3-way diverting valve (DN40-150)

(Operating mode refer to page 24)

Stem sealing

Fig. 450: • PTFE-packing -10°C up to +250°C
• Pure graphite-packing -10°C up to +450°C

Fig. 451: • Stainless steel bellows seal with safety stuffing box -60°C up to +450°C

Plug design
standard:
- Parabolic plug, metal seat / V-port plug, metal seat

Guiding
- Stem and port guiding

Flow characteristic • linear

Rangeability
- 30 : 1

Shut off class (seat / plug leakage classes)
- Metal seat - Leakage class IV acc. to DIN EN 1349 or IEC 60534-4

Closing pressures refer to page 20.

Technical data for actuator refer to data sheet.

Selection of possible applications

Industrial installations, processing technology, plant manufacturing, etc.
(other applications on request)

Selection of possible flow media

Fig. 450: Cooling water, cooling brine, warm water, hot water, steam, gas, etc.

Fig. 451: Refrigerant, cooling water, warm water, hot water, thermal oil, steam, gas, etc.

(other flow media on request)

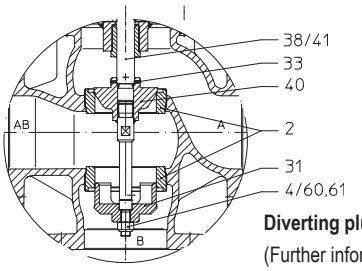

Diverting plug DN40 upwards
(Further information refer to page 24)

Failure position dependent on valve duty.

Retracted stem on air failure:
- with a mixing valve port A -> AB is closed
- with a diverting valve port B -> AB is closed

Extended stem on air failure:
- with a mixing valve port B -> AB is closed
- with a diverting valve port A -> AB is closed

Top mounted handwheel

Actuator		DP34T
Ø D1	(mm)	400
H1	(mm)	635
Weight	(kg)	41
Technical data for actuator refer to data sheet DP32-34Tri.		

Dimensions and weights

DN				125v	150v
L			(mm)	400	480
H2			(mm)	200	210
DP 34T ØA = 405 mm	H		(mm)	1062	1095
	Fig. 450	PN16	(kg)	184	211
		PN25/40	(kg)	211	254
	H		(mm)	1509	1542
	Fig. 451	PN16	(kg)	194	221
		PN25/40	(kg)	222	264
Standard-flange dimensions refer to page 23.					

Face-to-face dimension FTF series 1 according to DIN EN 558

Parts

Pos.	Description	Fig. 22.450 / Fig. 23.450 Fig. 22.451 / Fig. 23.451	Fig. 34.450 / Fig. 35.450 Fig. 34.451 / Fig. 35.451	Fig. 55.450
1	Body	EN-GJS-400-18U-LT, EN-JS1049	GP240GH+N, 1.0619+N	GX5CrNiMo19-11-2, 1.4408
2	Seat ring *	X20Cr13+QT, 1.4021+QT		X6CrNiMoTi17-12-2, 1.4571
3	Plug *	X20Cr13+QT, 1.4021+QT		X6CrNiMoTi17-12-2, 1.4571
4	Hexagon nut *	8-A2B	--	--
5	Stem *	X20Cr13+QT, 1.4021+QT		X6CrNiMoTi17-12-2, 1.4571
6	Straight pin *	X10CrNi18-8, 1.4310		--
8	Guide bushing	X20Cr13+QT, 1.4021+QT (hardened)		X6CrNiMoTi17-12-2, 1.4571
9	Gasket *	Pure graphite (CrNi laminated with graphite)		--
10	Studs	25CrMo4, 1.7218		A4 - 70
11	Hexagon nuts	C35E, 1.1181		A4
13	Packing ring	PTFE or Pure graphite		--
14	Washer *	X5CrNi18-10, 1.4301		--
20.1	Bellows housing	EN-GJS-400-18U-LT, EN-JS1049	GP240GH+N, 1.0619+N	--
20.3	Stem- / Bellows unit *	X20Cr13+QT, 1.4021+QT / X6CrNiTi18-10, 1.4541		--
20.5	Guide bushing	X20Cr13+QT, 1.4021+QT (hardened)		--
20.6	Gasket *	Pure graphite (CrNi laminated with graphite)		--
20.7	Studs	25CrMo4, 1.7218		--
20.8	Hexagon nuts	C35E, 1.1181		--
20.9	Straight pin	St		--
20.10	Packing ring *	Pure graphite		--
20.12	Washer *	X5CrNi18-10, 1.4301		--
20.13	Stuffing box housing	EN-GJS-400-18U-LT, EN-JS1049	GP240GH+N, 1.0619+N	--
20.15	Packing follower	X20Cr13+QT, 1.4021+QT		--
20.16	Sleeve nut	X8CrNiS18-9, 1.4305		--
22	Packing box flange	EN-GJS-400-18U-LT, EN-JS1049		--
23	Studs	25CrMo4, 1.7218		--
24	Hexagon nuts	C35E, 1.1181		--
25	Adapter flange	EN-GJS-400-18U-LT, EN-JS1049		--
26	Hexagon socket head screw	8.8 - A2B		--
27	Gasket *	Pure graphite		--
28	Studs	25CrMo4, 1.7218		--
29	Hexagon nuts	C35E, 1.1181		--
31	Plug *	X20Cr13+QT, 1.4021+QT		X6CrNiMoTi17-12-2, 1.4571
33	Straight pin *	X10CrNi18-8, 1.4310		--
37	Stem adapter *	X20Cr13+QT, 1.4021+QT		--
38	Stem adapter *	X20Cr13+QT, 1.4021+QT		--
39	Stuffing box housing	P265 GH, 1.0425 / P250 GH, 1.0460		--
40	Plug *	X20Cr13+QT, 1.4021+QT		X6CrNiMoTi17-12-2, 1.4571
41	Stem *	X20Cr13+QT, 1.4021+QT		X6CrNiMoTi17-12-2, 1.4571
60	Hexagon nut *	--	A4	
61	Locking washer set	--	A4	
* Spare parts				

Information / restriction of technical rules need to be observed!

ARI-Valves of EN-JL1040 are not allowed to be operated in systems acc. to TRD 110.

A production allowance acc. to TRB 801 No. 45 exists (acc. to TRB 801 No. 45 EN-JL1040 is not allowed.)

The engineer, designing a system or a plant, is responsible for the selection of the correct valve.

max. permissible closing pressures for both seat positions on flow-to-open P2 = 0
Observe restrictions by Pressure-temperature-ratings, refer to page 23.
Observe standard values for selection of plugs, refer to „Selection ARI-STEVI“ in the Technical annex.

Spring closes port A -> AB or Spring closes port B -> AB

Mixing function AB → A, B	**DN**					**125**	**150**
	Seat-Ø A/B (mm)					105/105	125/125
	Standard Kvs-values					170	200
	Reduced Kvs-values					--	--
	Travel (mm)					30	
Actuator **DP34T**	Spring range (bar)	0,2-1,0	Air supply pressure min. (bar)	1,2	**II.**	1,9 b)	1,2 b)
					III.	2 e)	1,3 e)
		0,4-1,2		1,6	**II.**	5,5 b)	3,7 b)
					III.	5,5 d)	3,8 d)
		0,8-2,4		3,2	**II.**	12,5	8,7
					III.	12,5 b)	8,8 b)
		2,1-3,0		5,1	**II.**	35,4	25
					III.	--	--
		2,4-3,6		6,0	**II.**	40	28,7
					III.	--	--

II. Fig. 450: PTFE- / Pure graphite-packing; **III. Fig. 451: Bellows seal**

Air supply pressure max. of pneumatic actuators DP:	max. permissible	6 bar
Air supply pressure max. limit of control valve:	max. permissible	a) 5 bar b) 4,5 bar c) 4 bar d) 3,5 bar e) 3 bar

max. permissible closing pressures for both seat positions on flow-to-open P2 = 0
Observe restrictions by Pressure-temperature-ratings, refer to page 23.
Observe standard values for selection of plugs, refer to „Selection ARI-STEVI“ in the Technical annex.

Spring closes port A -> AB or Spring closes port B -> AB

Diverting function	DN					125	150
AB → A, B	Seat-Ø A/B (mm)					105/105	125/125
	Standard Kvs-values					170	200
	Reduced Kvs-values					--	--
	Travel (mm)					30	
Actuator **DP34T**	Spring range (bar)	0,2-1,0	Air supply pressure min. (bar)	1,2	**II.**	1,9 b)	1,2 b)
					III.	2 e)	1,3 e)
		0,4-1,2		1,6	**II.**	5,5 b)	3,7 b)
					III.	5,5 d)	3,8 d)
		0,8-2,4		3,2	**II.**	12,5	8,7
					III.	12,5 b)	8,8 b)
		2,1-3,0		5,1	**II.**	35,4	25
					III.	--	--
		2,4-3,6		6,0	**II.**	40	28,7
					III.	--	--

II. Fig. 450: PTFE- / Pure graphite-packing; **III. Fig. 451: Bellows seal**

Air supply pressure max. of pneumatic actuators DP:	max. permissible	6 bar				
Air supply pressure max. limit of control valve:	max. permissible	a) 5 bar	b) 4,5 bar	c) 4 bar	d) 3,5 bar	e) 3 bar

Standard-flange dimensions

Flanges acc. to DIN EN 1092-1/-2 (Flangeholes / -thickness tolerances acc. to DIN 2533/2544/2545)

DN			15	20	25	32	40	50	65	80	100	125	150
PN16	ØD	(mm)	95	105	115	140	150	165	185	200	220	250	285
PN16	ØK	(mm)	65	75	85	100	110	125	145	160	180	210	240
PN16	n x Ød	(mm)	4x14	4x14	4x14	4x18	4x18	4x18	4x18	8x18	8x18	8x18	8x22
PN25	ØD	(mm)	95	105	115	140	150	165	185	200	235	270	300
PN25	ØK	(mm)	65	75	85	100	110	125	145	160	190	220	250
PN25	n x Ød	(mm)	4x14	4x14	4x14	4x18	4x18	4x18	8x18	8x18	8x22	8x26	8x26
PN40	ØD	(mm)	95	105	115	140	150	165	185	200	235	270	300
PN40	ØK	(mm)	65	75	85	100	110	125	145	160	190	220	250
PN40	n x Ød	(mm)	4x14	4x14	4x14	4x18	4x18	4x18	8x18	8x18	8x22	8x26	8x26

Pressure-temperature-ratings acc. to DIN EN 1092-2

Material			-60°C to <-10°C	-10°C to 120°C	150°C	200°C	250°C	300°C	350°C	400°C	450°C
EN-JL1040	PN16	(bar)	--	16	14,4	12,8	11,2	9,6	--	--	--
EN-JS1049	PN16	(bar)	on request	16	15,5	14,7	13,9	12,8	11,2	--	--
EN-JS1049	PN25	(bar)	on request	25	24,3	23	21,8	20	17,5	--	--

Pressure-temperature-ratings acc. to DIN EN 1092-1

Material			-60°C to <-10°C	-10°C to 50°C	100°C	150°C	200°C	250°C	300°C	350°C	400°C	450°C
1.0619+N	PN25	(bar)	18,7	25	23,3	21,7	19,4	17,8	16,1	15	14,4	13,9
1.0619+N	PN40	(bar)	30	40	37,3	34,7	30,2	28,4	25,8	24	23,1	22,2
1.4408	PN40	(bar)	40	40	37,3	33,8	31,1	29,3	27,6	26,7	25,6	--

Intermediate values for max. permissible operational pressures can be determined by linear interpolation of the given temperature / pressure chart.

* Valve with extended bonnet, studs and nuts made of A4-70 (at temperatures below -10°C)

Please indicate when ordering

- Figure-No.
- Nominal diameter
- Nominal pressure
- Body material
- Plug design
- Kvs-value
- Stem sealing
- Actuator
- Special design / accessories

Example:

Figure 35.450; nominal diameter DN 100; nominal pressure PN 40; body material 1.0619+N; mixing construction; kvs 160; stem sealing PTFE-V-ring unit; ARI-PREMIO 5 kN.

Dimensions in mm
Weights in kg
Pressures in barg (gauge)
1 bar ≙ 10^5 Pa ≙ 0,1 MPa
Kvs in m^3/h

Stem sealing

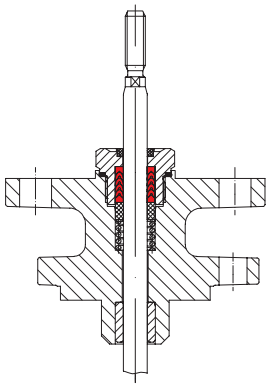

Spring loaded PTFE-V ring packing unit

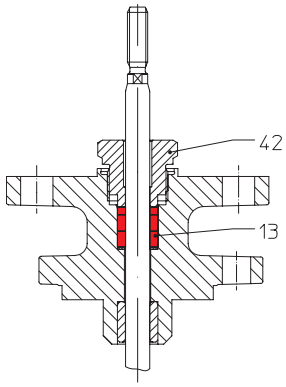

Pos.	Description	
13	Packing ring *	PTFE or Pure graphite
42	Screw joint *	X8CrNiS18-9, 1.4305

PTFE-/ Pure graphite-packing

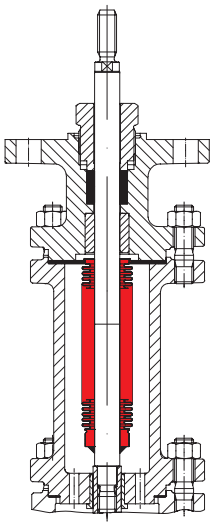

Bellows seal with safety stuffing box

Body design

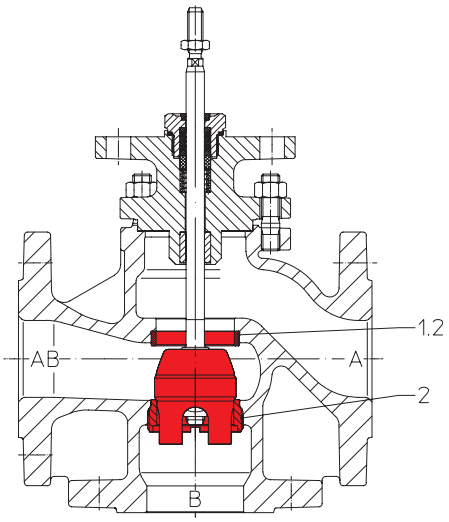

Mixing plug with pressed in seat ring (seat A) and screwed seat ring (seat B) standard for DN15-100

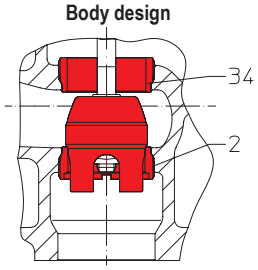

Mixing plug with two screwed seat rings
(standard at DN125/150 and design with stainless steel)

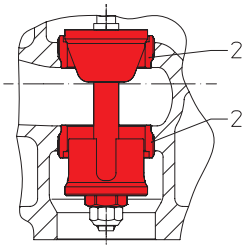

Pos.	Description	
1.2	Seat ring	X20Cr13+QT, 1.4021+QT
2	Seat ring *	X20Cr13+QT, 1.4021+QT
		X6CrNiMoTi17-12-2, 1.4571
34	Seat ring	X20Cr13+QT, 1.4021+QT
		X6CrNiMoTi17-12-2, 1.4571

Diverting plug with two screwed seat rings (standard)

Operating mode

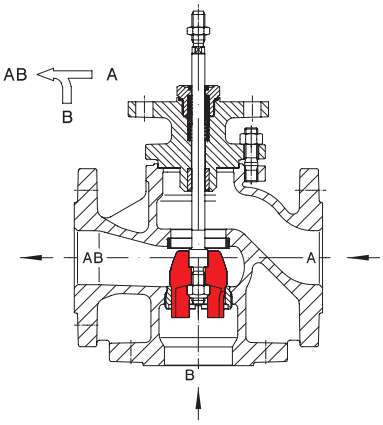

Design with mixing plug DN 15-150

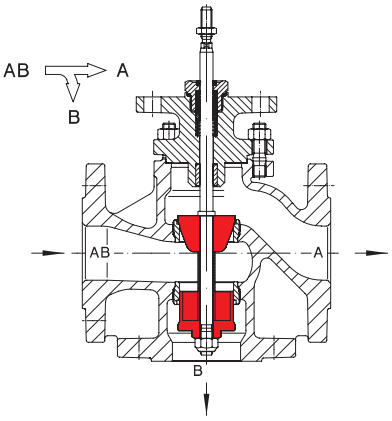

Design with diverting plug DN 40-150
(Attention: reduced Kvs-values)

ARI-Control valves are suitable for use with pneumatic or electric actuators.

According to the application two different variations are possible (see drawings on the left)

Design with mixing plug as standard.

Select when the valve is used for mixing service (2 inlets, 1 outlet).

DN 15 - 32 with mixing plug can also be used for diverting service (1 inlet, 2 outlets).
In exceptions the design with mixing plug can also be used in diverting service for DN ≥40. Only small closing pressures are possible.

Design with diverting plug will be used exclusively for diverting service.

ARMATUREN
Technology for the Future.
GERMAN QUALITY VALVES
ARI-Armaturen Albert Richter GmbH & Co. KG, D-33756 Schloß Holte-Stukenbrock,
Tel. +49 52 07 / 994-0, Telefax +49 52 07 / 994-158 or 159 Internet: http://www.ari-armaturen.com E-mail: info.vertrieb@ari-armaturen.com